DWG NO.	S K E N 5 4 3	H50

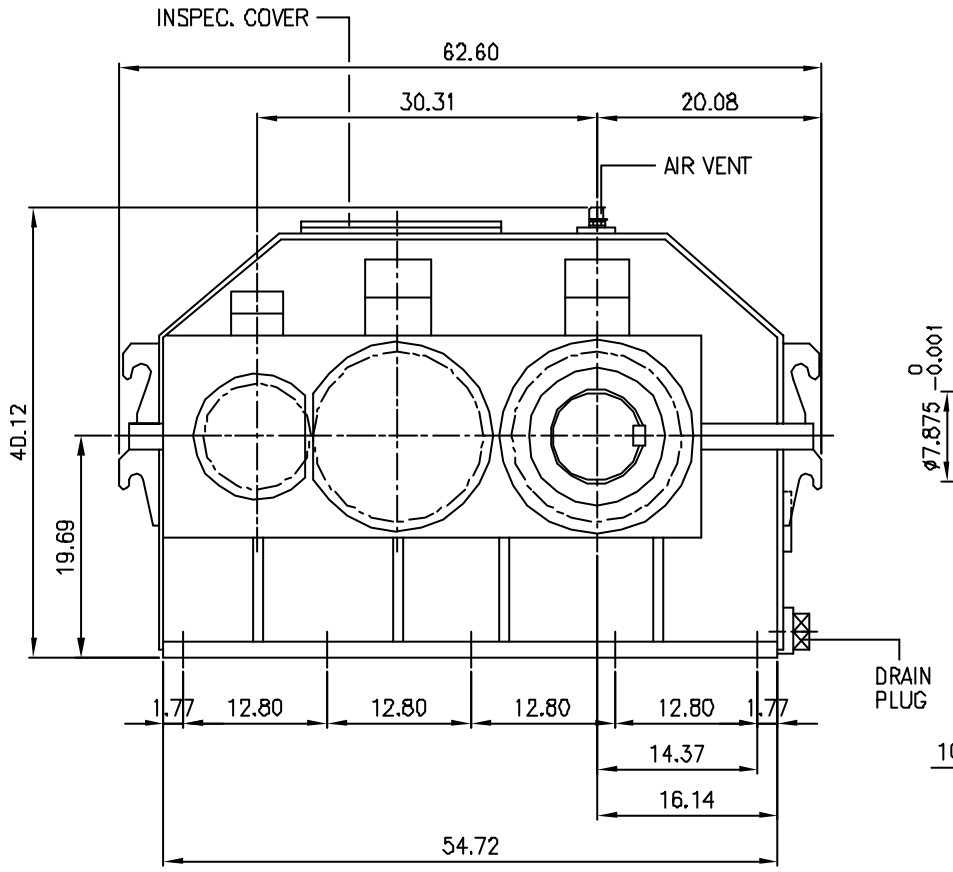

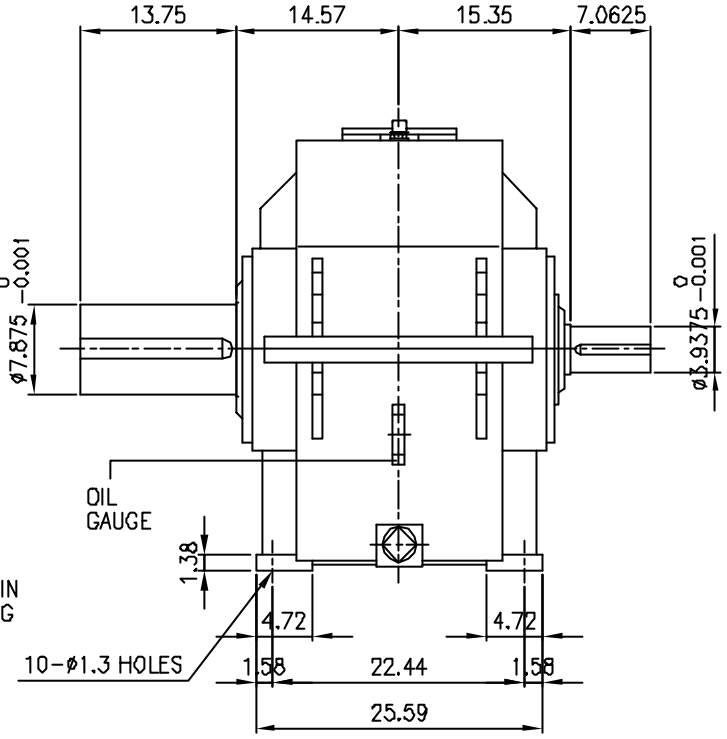

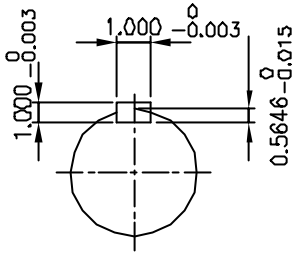

INPUT SHAFT

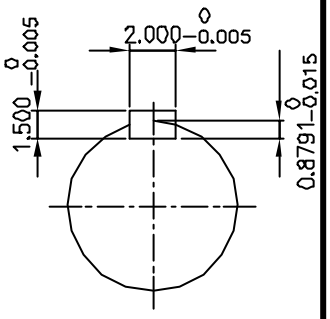

OUTPUT SHAFT

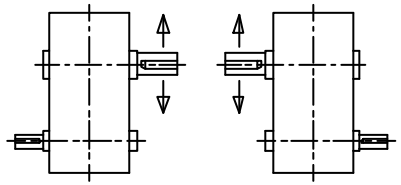

LR RL

SHAFT ARRANGEMENT & DIRECTION of ROTATION

REV	DESCRIPTION	APPR	CHCK	DRWN	DATE
△					
△					
△					
△					
△					

TYPE					DWG. NAME		
SHB 45 (i = 7.1 ~ 11.2)					DIMENSION		
APPROV		CHECK	DESIGN	DRAWN	THIRD ANGLE PROJECTION	SCALE 1/12	DATE 1998.11.26.
L.H.Y		M.B.U	J.J.K		REF DWG NO.		
HYOSUNG CORPORATION					DWG NO.	S K E N 5 4 3	H50