DWG NO.	S K E N 5 9 9	H 5 0

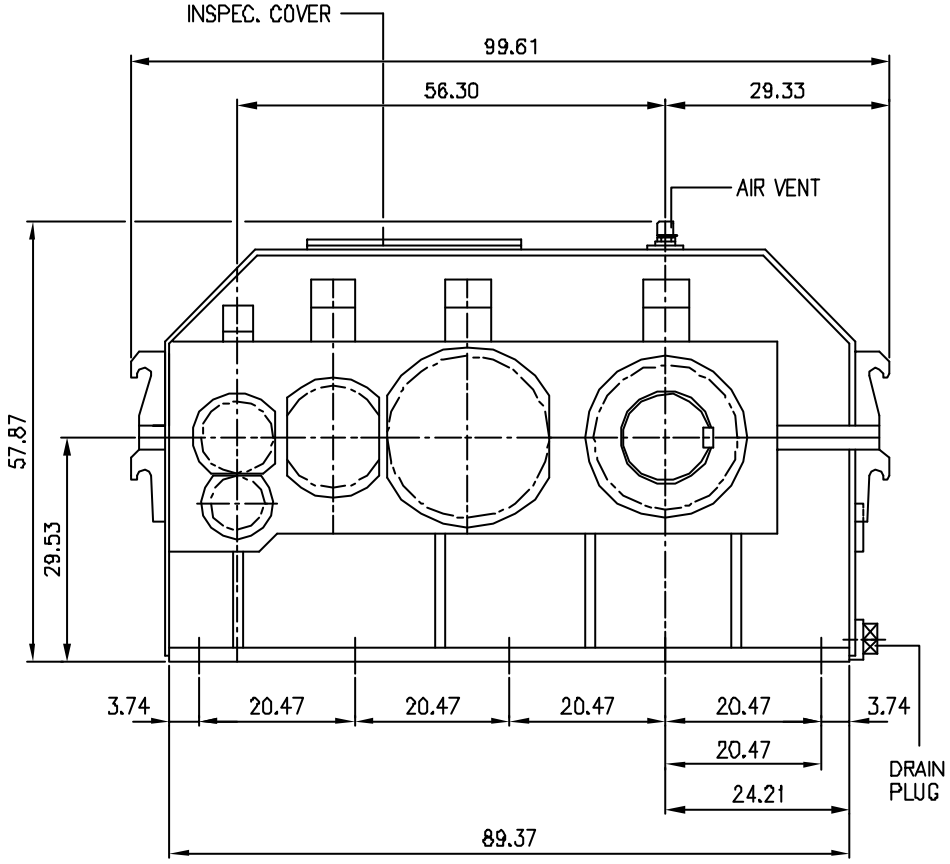

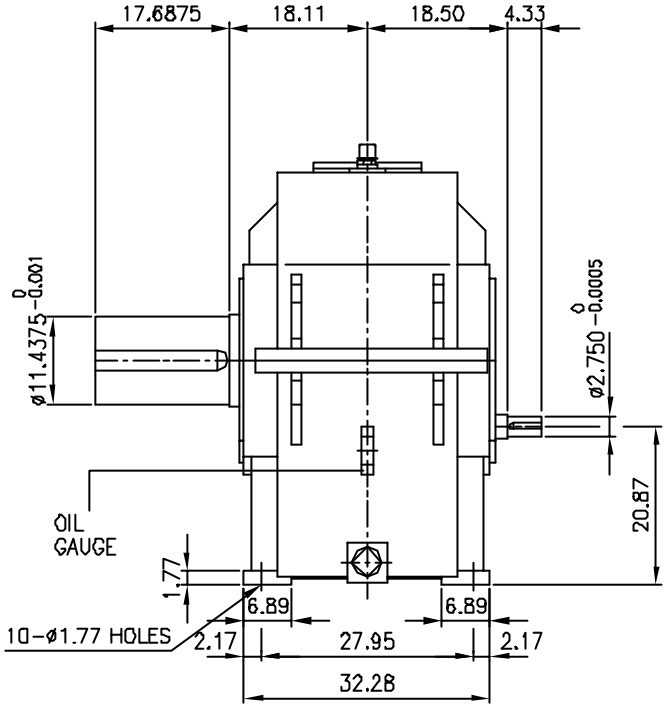

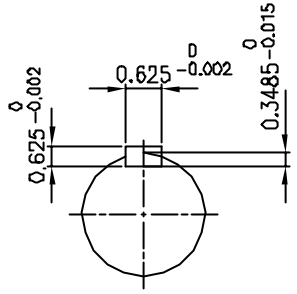

INPUT SHAFT

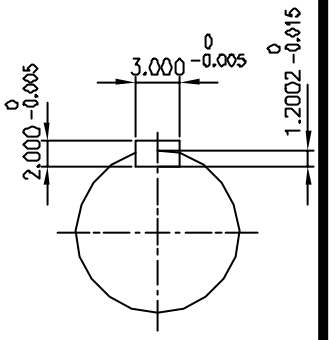

OUTPUT SHAFT

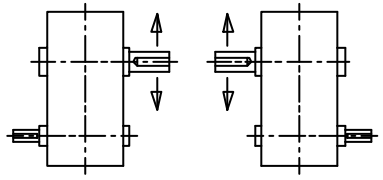

SHAFT ARRANGEMENT & DIRECTION of ROTATION

REV	DESCRIPTION	APPR	CHCK	DRWN	DATE
△					
△					
△					
△					
△					

TYPE					DWG. NAME			
SHD 66 (i = 112 ~ 280)					DIMENSION			
APPROV		CHECK	DESIGN	DRAWN	THIRD ANGLE PROJECTION	SCALE	1 / 17	DATE 1998.11.26.
L.H.Y		M.B.U	K.Y.S		REF DWG NO.			
HYOSUNG INDUSTRIES CO.,LTD.					DWG NO.	S K E N 5 9 9		H 5 0