DWG NO.	S K E N 6 4 8	H50

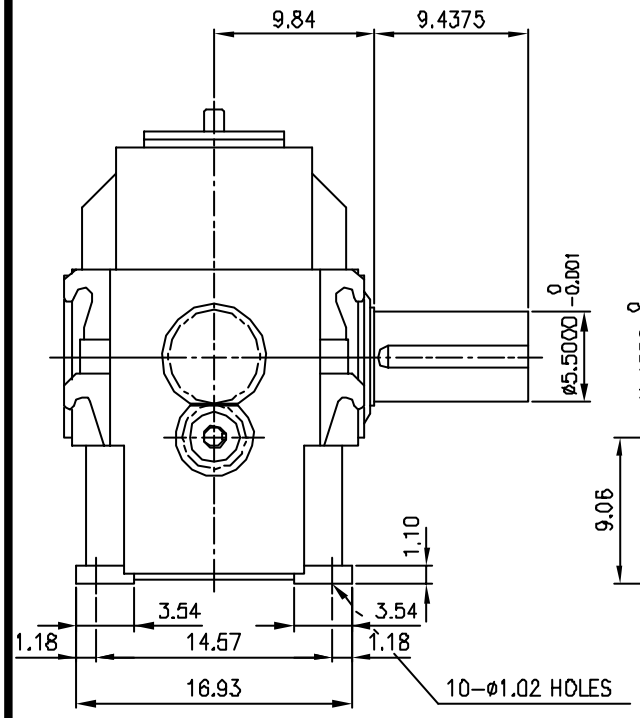

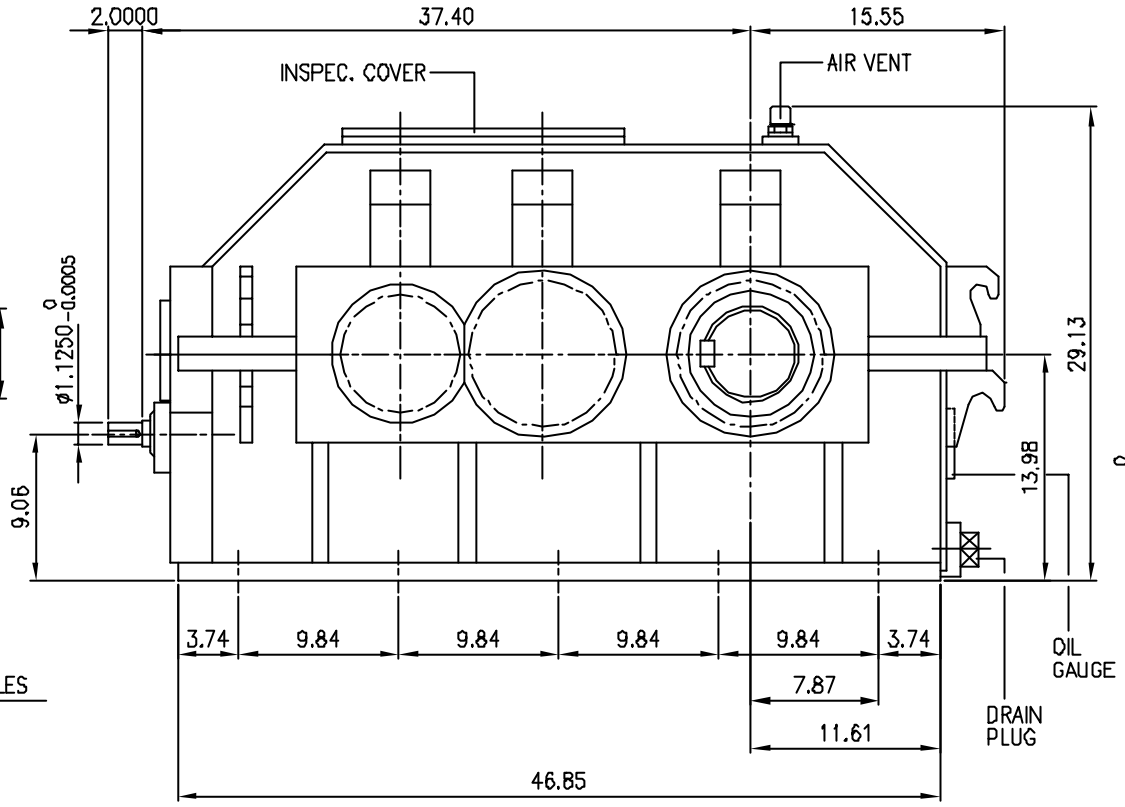

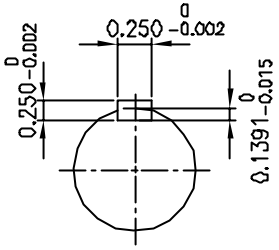

INPUT SHAFT

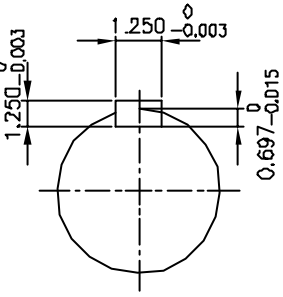

OUTPUT SHAFT

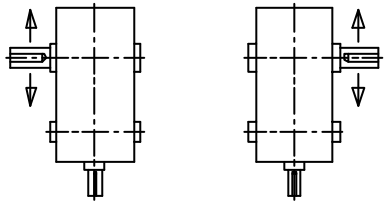

SHAFT ARRANGEMENT & DIRECTION of ROTATION

REV	DESCRIPTION	APPR	CHCK	DRWN	DATE
△					
△					
△					
△					
△					

TYPE					DWG. NAME			
SKD32 (i = 224~355)					DIMENSION			
APPROV		CHECK	DESIGN	DRAWN	THIRD ANGLE PROJECTION	SCALE	1/8	DATE 1998.11.26
L.H.Y		M.B.U	J.S.S		REF DWG NO.			
HYOSUNG INDUSTRIES CO.,LTD.					DWG NO.	S K E N 6 4 8		H50