지시외 용접치수	지시외 모서리부분	지시외일반치수 허용치	절삭가공부분	구분	0.5 ~ 6	6 ~ 30	30 ~ 120	120 ~ 315	315 ~ 1000	1000 ~ 2000
a=0	지시외일반 모서리제거 C = 0.3~1.2 R = 0.3~1.2			급	??0.1	??0.2	??0.3	??0.5	??0.8	??1.2

표 면 거 칠 기									
Ra	√	25	12.5	6.3	3.2	1.6	0.8	0.2	0.1
Rmax		100S	50S	25S	12.5S	6.3S	3.2S	0.8S	0.4S
다듬질	~	▽		▽▽		▽▽▽		▽▽▽▽	

NO.	DATE	REVISION & DESCRIPTION	SIGNATURE REVIEWED	SIGNATURE CHECKED
△1				
△2				

NOTE

1, MOTOR POWER	:	500 KW
2, INPUT RPM	:	1785 RPM
3, OUTPUT RPM	:	14.238 RPM
4, TOTAL RATIO	:	1/125.37(ACTUAL : 1/123.2)
5, OIL CAPACITY	:	ISO VG #220 (APPROX. 2,700 LITTERS)
6, QUANTITY	:	1 SET

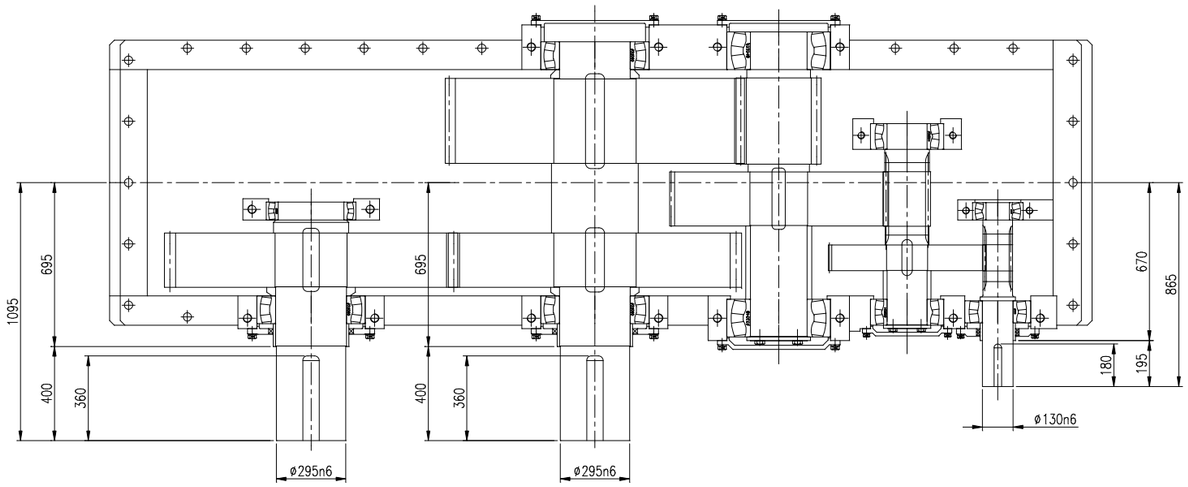

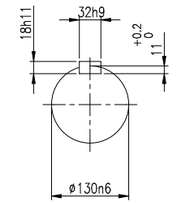

INPUT SHAFT

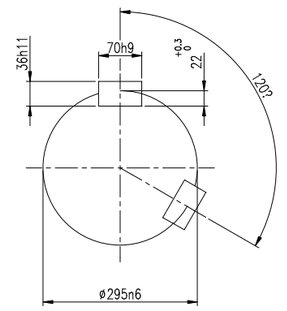

OUTPUT SHAFT

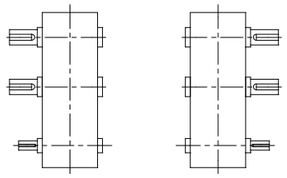

L-LL R-RR

SHAFT ARRANGEMENT & DIRECTION of ROTATION

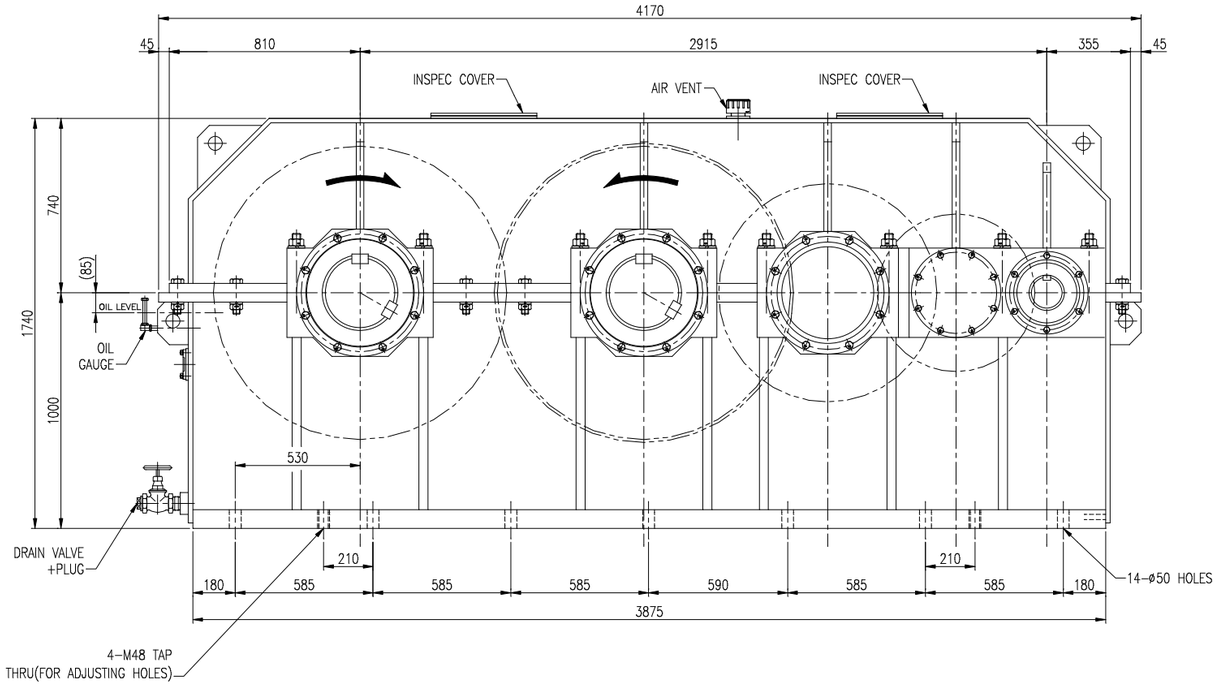

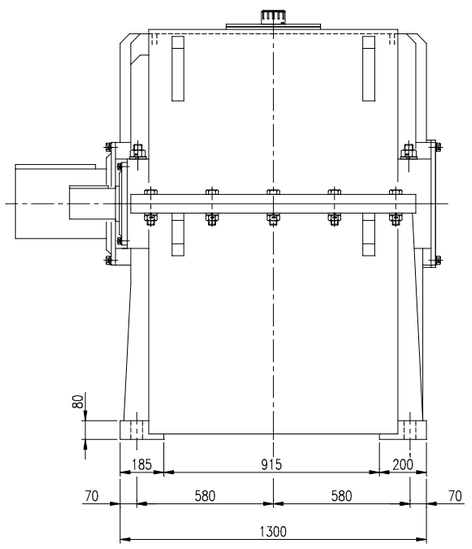

REV	DESCRIPTION	APPR	CHCK	DRWN	DATE
△					
△					
△					
△					
△					

TYPE SHC78-DS

DWG. NAME DIM & ASS'Y

DRAWN	DESIGN	CHECKED	REVIEWED	APPROVED
GM 2007.4.30 Tech	K 2007.4.30 K D	C 2007.5.02 J D		K 2007.5.02 D I

SCALE 1/13 DATE 2007.04.30

REF. DWG. NO. —

UNIT mm

HYOSUNG

DWG. NO. DKBD10171 △0