REV	DESCRIPTION	APPR	CHCK	DRWN	DATE
△					
△					
△					
△					

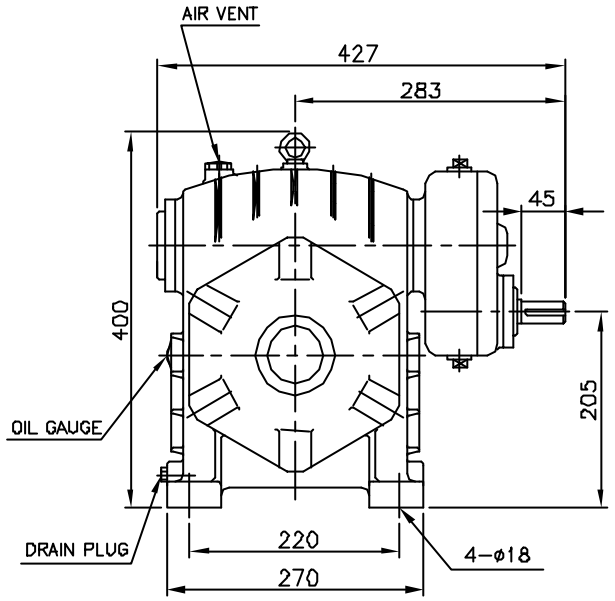

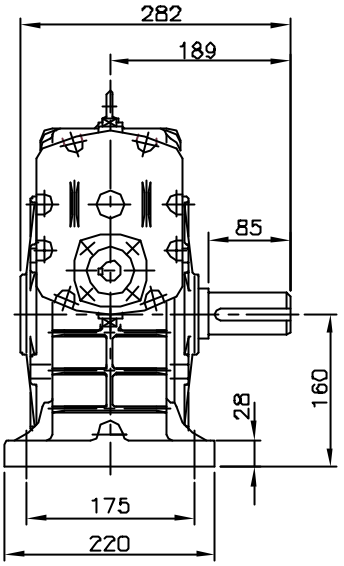

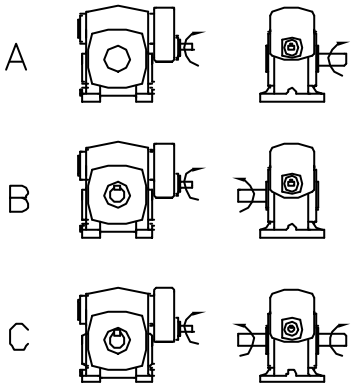

KEY 12x8x80

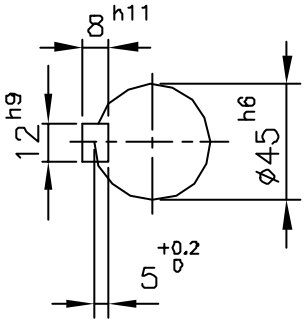

OUTPUT SHAFT

KEY 7x7x42

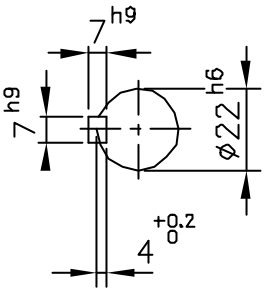

INPUT SHAFT

OIL : ISO VG 320
ABOUT : 3.6 (l)
WEIGHT : 68.1 Kg

TYPE	DWG. NAME				
NHL 115	DIMENSION				
APPROV	CHECK	DESIGN	DRAWN	THIRD ANGLE PROJECTION	SCALE N / S	DATE 2000.01.01
이 00.01.01. 호영	문 00.01.01 병옥	김 00.01.01. 기동		REF DWG NO.	
HYOSUNG CORPORATION				DWG NO.	W K E G 4 1 3