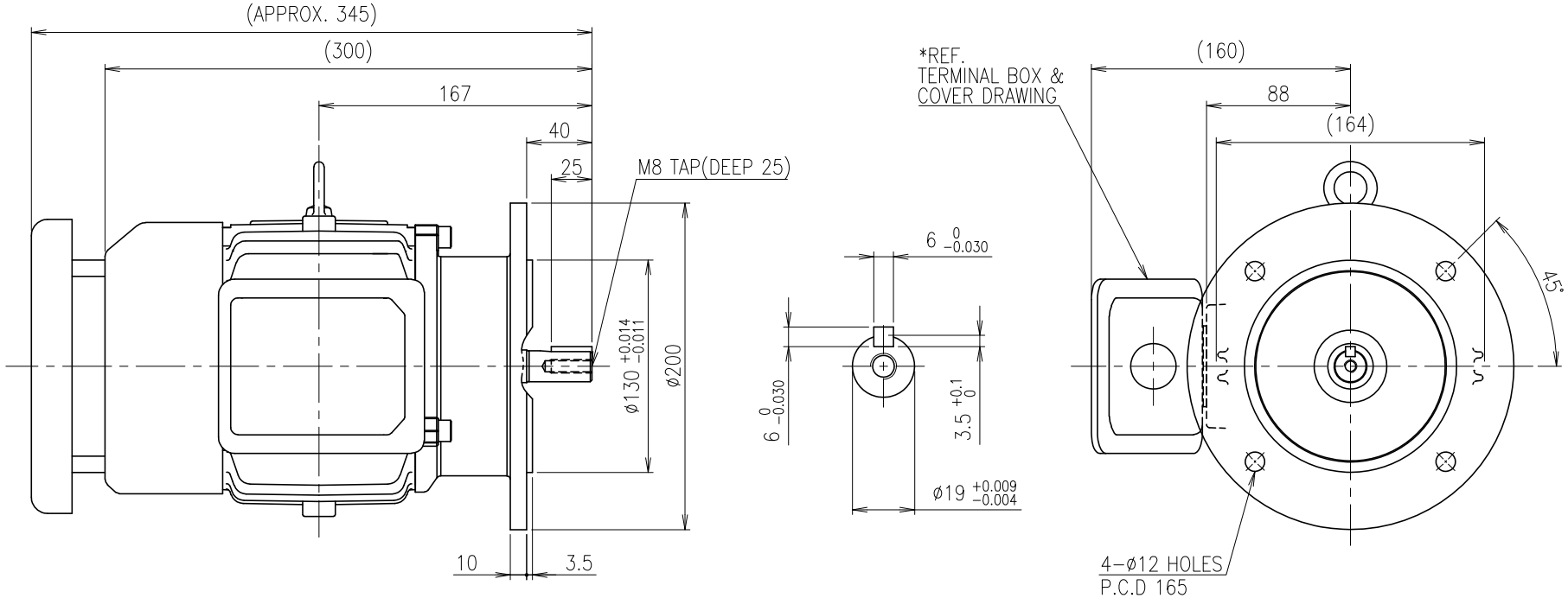

<NOTE>

1) TOLERANCE OF HOLES CONFORMS TO H14 OF ISO 2768.
2) DIMENSIONS AND SHAPE COULD VARY UPON DESIGN CONCEPT (EXCEPT FOR IEC STANDARD).

No.	DATE	DESCRIPTION of REVISION
2	21.12.14	Eye bolt added

A4(297X210mm) FORM CE-14-0100-4A4 2013.11.20

HYOSUNG HEAVY INDUSTRIES

TYPE A.C MOTOR 80M

DWG NAME	저압 유도전동기 외형도 OUTLINE DIMENSIONS				
DWG No.	ES1AS40251			UNIT	mm
				SCALE	1:3.5
DESIGNED	CHECKED	REVIEWED	APPROVED	DATE	2021-12-14
2021.12.17 SOON UEI LEE	2021.12.23 JUN HO CHA		2021.12.23 TAE HYUN KIM	REVISION No.	02
				THIRD ANGLE PROJECTION	
REF. No.	–				©

The information written in this drawing is HYOSUNG HEAVY INDUSTRIES's property, and may not be disclosed and/or reproduced without the prior official permission of HYOSUNG HEAVY INDUSTRIES Corp.

이 도면에 표시된 모든 내용은 효성중공업(주)의 소유이며 당사의 사전 승인 없이 무단사용을 금합니다.