No.	NAME	MATERIAL	DWG/MATL No.	CODE	Q'TY	SIZE	WEIGHT	REMARK
					0			

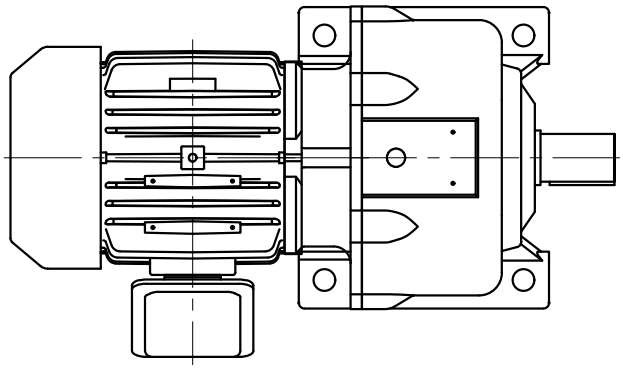

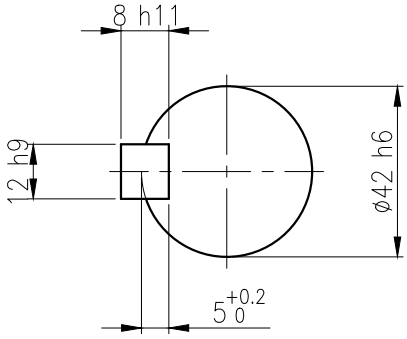

OUTPUT SHAFT

KEY 12 x 8 x 57

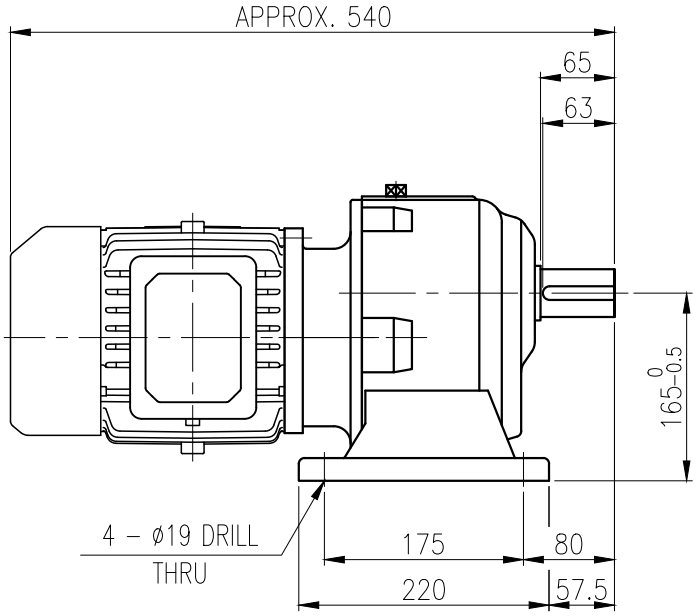

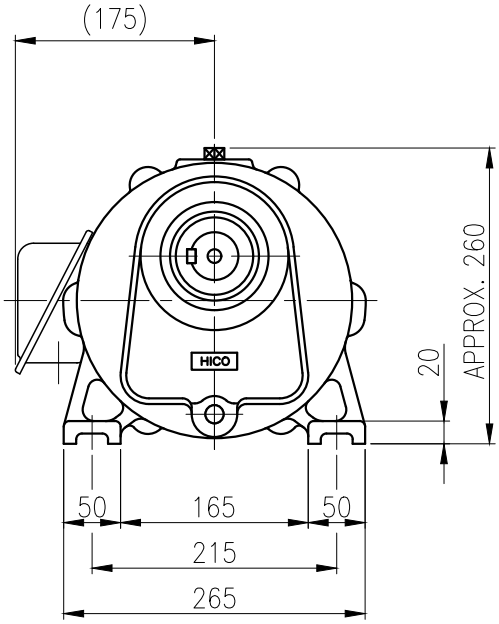

		BEARING			
		INPUT SHAFT	#6204ZZ	#6305ZZ	
OIL SEAL		2ND PINION	#6302ZZ	#6303ZZ	GREASE : NLGI(EP)00
MOTOR SHAFT	D(M) 22 x 35 x 8	3RD PINION	#6303ZZ	#6305ZZ	ABOUT 0.8 kg
OUTPUT SHAFT	D(M) 45 x 68 x 12	OUTPUT SHAFT	#6309ZZ	#PM3020	WEIGHT 62 kg

No.	DATE	DESCRIPTION of REVISION

DWG NAME: 외형도 OUTLINE DIMENSION

DWG No.: EK2D007142H0001

UNIT: mm

SCALE: 1:1

DESIGNED	CHECKED	REVIEWED	APPROVED	DATE	2018-08-15
2018.10.01 최성민	2018.10.01 문병선	2018.10.01 박희성	2018.10.01 홍원철	REVISION No.	01
				THIRD ANGLE PROJECTION	

HYOSUNG HEAVY INDUSTRIES

TYPE: FHC_90Fr(1.5kW)_40~60:1_N type

REF. No.: (EN200)

A

A4(210X297mm) FORM CE-14-0100-4A4 2013.11.20

이 도면상에 표시된 정보는 효성중공업(주)의 소유이며 당사의 사전 서면동의 없이 무단사용을 금합니다.

The information written in this drawing is HYOSUNG HEAVY INDUSTRIES's property, and may not be disclosed and/or reproduced without the prior official permission of HYOSUNG HEAVY INDUSTRIES Corp.