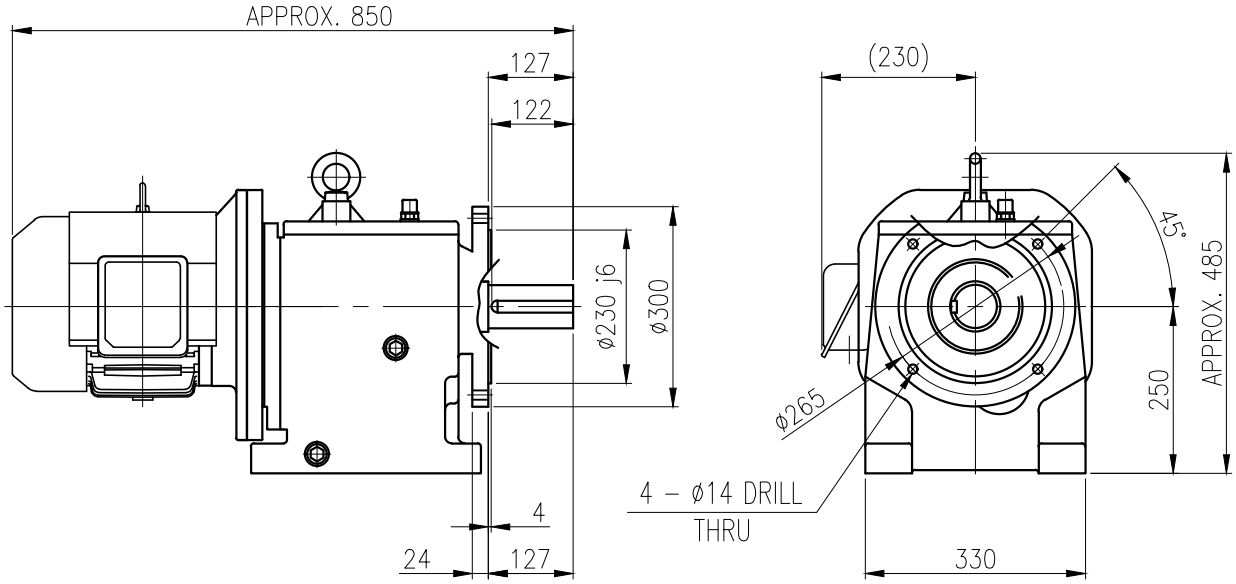


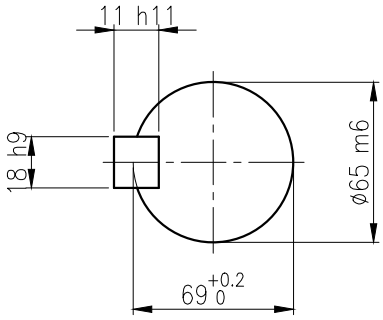


# OUTPUT SHAFT

(18x11x113)

| | | BEARING | | | |
|---|---|---|---|---|---|
| | | INPUT SHAFT | 6207ZZ | 6308ZZ | |
| OIL SEAL | | 2ND PINION | 6404 | NJ306E | OIL : ISO VG 220 |
| MOTOR SHAFT | D(M) 40 x 62 x 11 | 3RD PINION | NJ308E | NJ308E | ABOUT 10 l |
| OUTPUT SHAFT | D(M) 75 x 120 x 12 | OUTPUT SHAFT | 22209 | 22213 | WEIGHT 205 kg |

| No. | DATE | DESCRIPTION of REVISION |
|---|---|---|
| | | |
| | | |
| | | |

DWG NAME: 외형도 OUTLINE DIMENSION

DWG No.: EK2D007244W0001

UNIT: mm

SCALE: 1:1

| DESIGNED | CHECKED | REVIEWED | APPROVED | DATE | 2018-08-15 |
|---|---|---|---|---|---|
| 2018.10.01 최성민 | 2018.10.01 문병선 | 2018.10.01 박희성 | 2018.10.01 홍원철 | REVISION No. | 01 |
| | | | | THIRD ANGLE PROJECTION | |

HYOSUNG HEAVY INDUSTRIES

A4(210X297mm) FORM CE-14-0100-4A4 2013.11.20

TYPE: HFM25_132S(5.5kW)_40~60:1_Ntype

REF. No.: (GKDS474G02)

A

The information written in this drawing is HYOSUNG HEAVY INDUSTRIES's property, and may not be disclosed and/or reproduced without the prior official permission of HYOSUNG HEAVY INDUSTRIES Corp.

이 도면상에 표시된 정보는 효성중공업(주)의 소유이며 당사의 사전 서면동의 없이 무단사용을 금합니다.