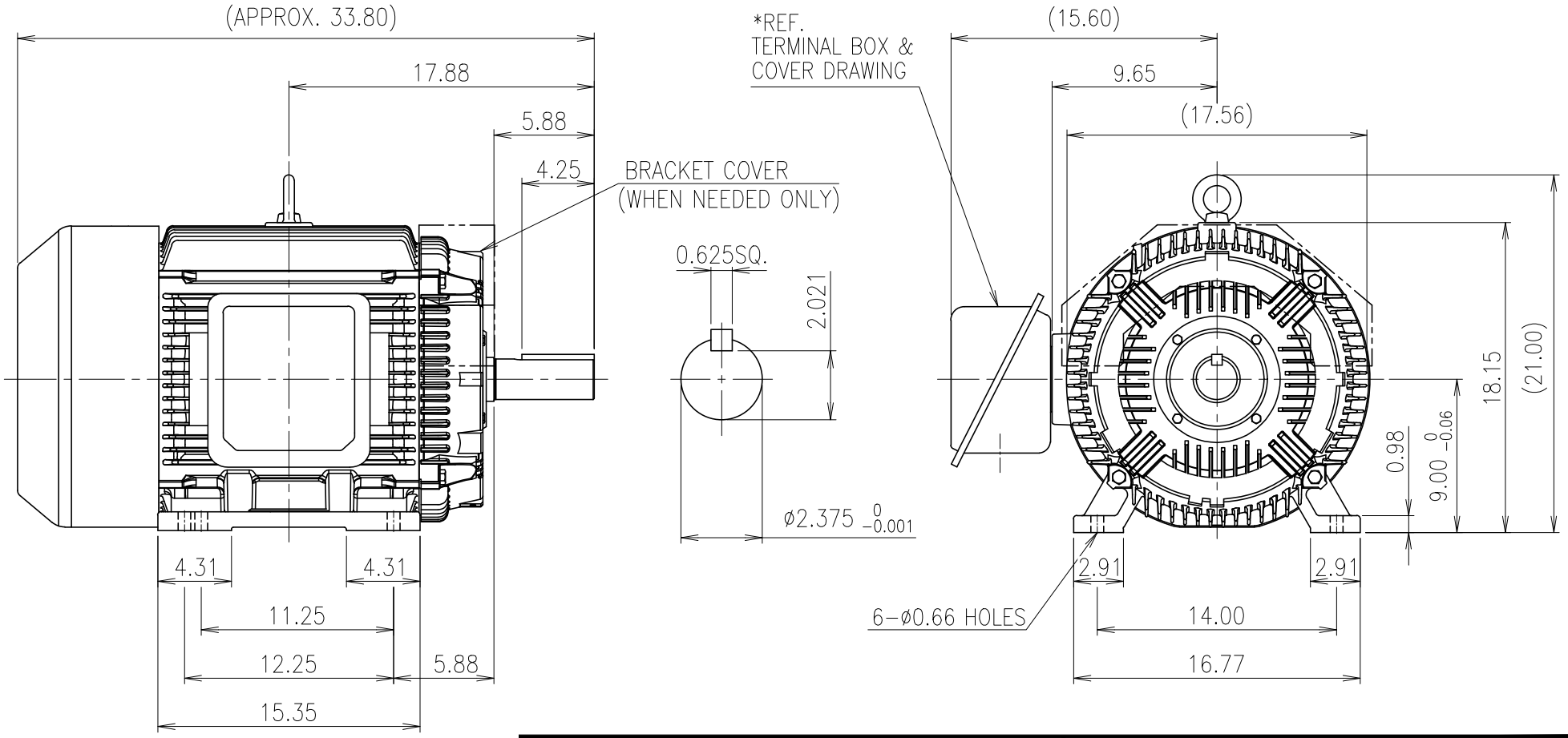

<NOTE>

1) THE TOLERANCES ARE IN ACCORDANCE WITH NEMA MG −1.

No.	DATE	DESCRIPTION of REVISION

A4(297X210mm) FORM CE−14−0100−4A4 2024.11.20

HYOSUNG HEAVY INDUSTRIES

TYPE A.C MOTOR 365T

DWG NAME: LOW VOLTAGE MOTOR
LV OUTLINE DIMENSIONS

DWG No.: ES1AS180420

UNIT	inch
SCALE	1:9.5
DATE	2025−10−30
REVISION No.	0.1
THIRD ANGLE PROJECTION	

REF. No. −

C

The information written in this drawing is HYOSUNG HEAVY INDUSTRIES's property, and may not be disclosed and/or reproduced without the prior official permission of HYOSUNG HEAVY INDUSTRIES Corp.

이 도면상에 표시된 정보는 효성중공업(주)의 소유이며 당사의 사전 서면동의 없이 무단사용을 금합니다.