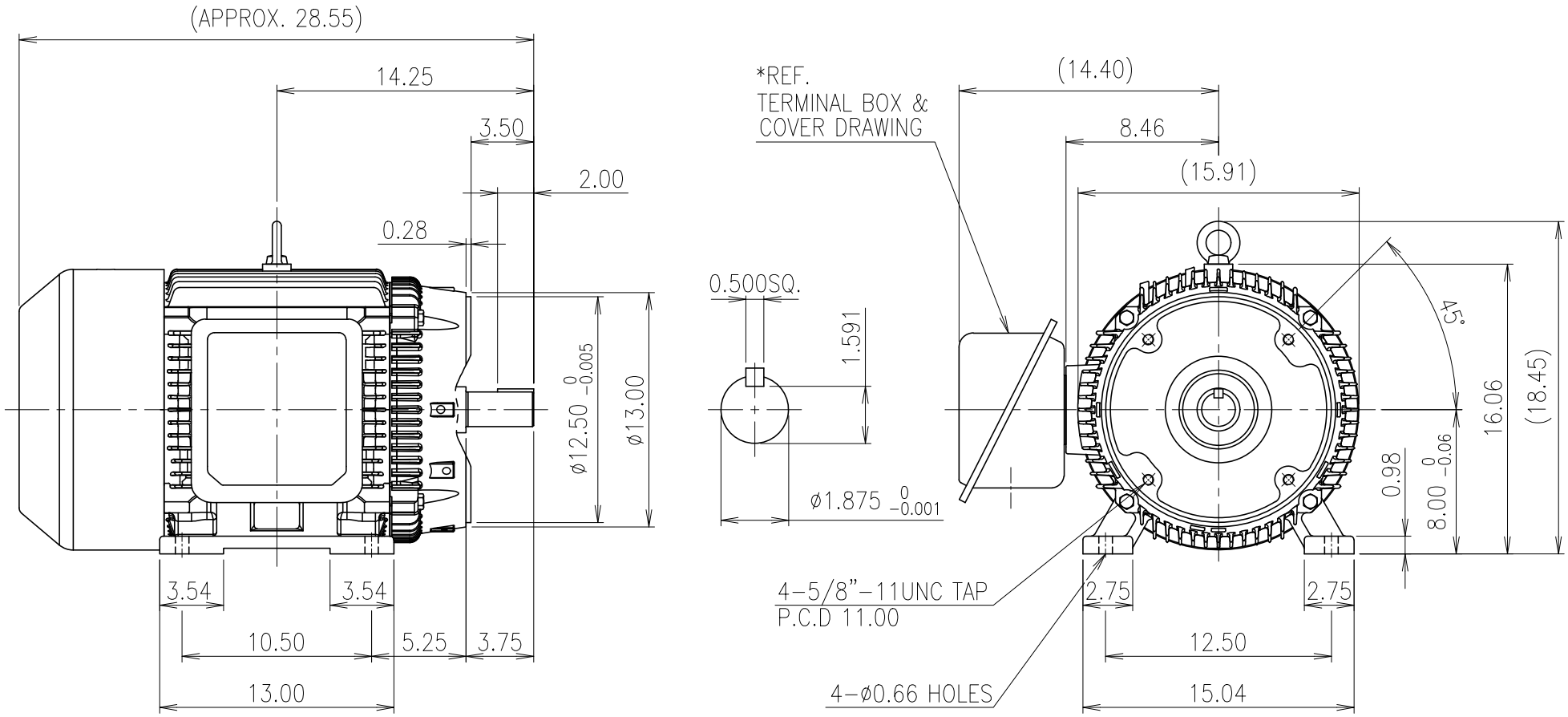


<NOTE>

1) THE TOLERANCES ARE IN ACCORDANCE WITH NEMA MG -1.

| No. | DATE | DESCRIPTION of REVISION |
|---|---|---|
| | | |
| | | |
| | | |

A4(297X210mm) FORM CE-14-0100-4A4 2024.11.20

HYOSUNG HEAVY INDUSTRIES

TYPE A.C MOTOR 324TSC

DWG NAME: LOW VOLTAGE MOTOR
LV OUTLINE DIMENSIONS

DWG No.: ES1AS180513

| | |
|---|---|
| UNIT | inch |
| SCALE | 1:9 |
| DATE | 2025-10-30 |
| REVISION No. | 0.1 |
| THIRD ANGLE PROJECTION | |

REF. No. -

C

The information written in this drawing is HYOSUNG HEAVY INDUSTRIES's property, and may not be disclosed and/or reproduced without the prior official permission of HYOSUNG HEAVY INDUSTRIES Corp.

이 도면상에 표시된 정보는 효성중공업(주)의 소유이며 당사의 사전 서면동의 없이 무단사용을 금합니다.