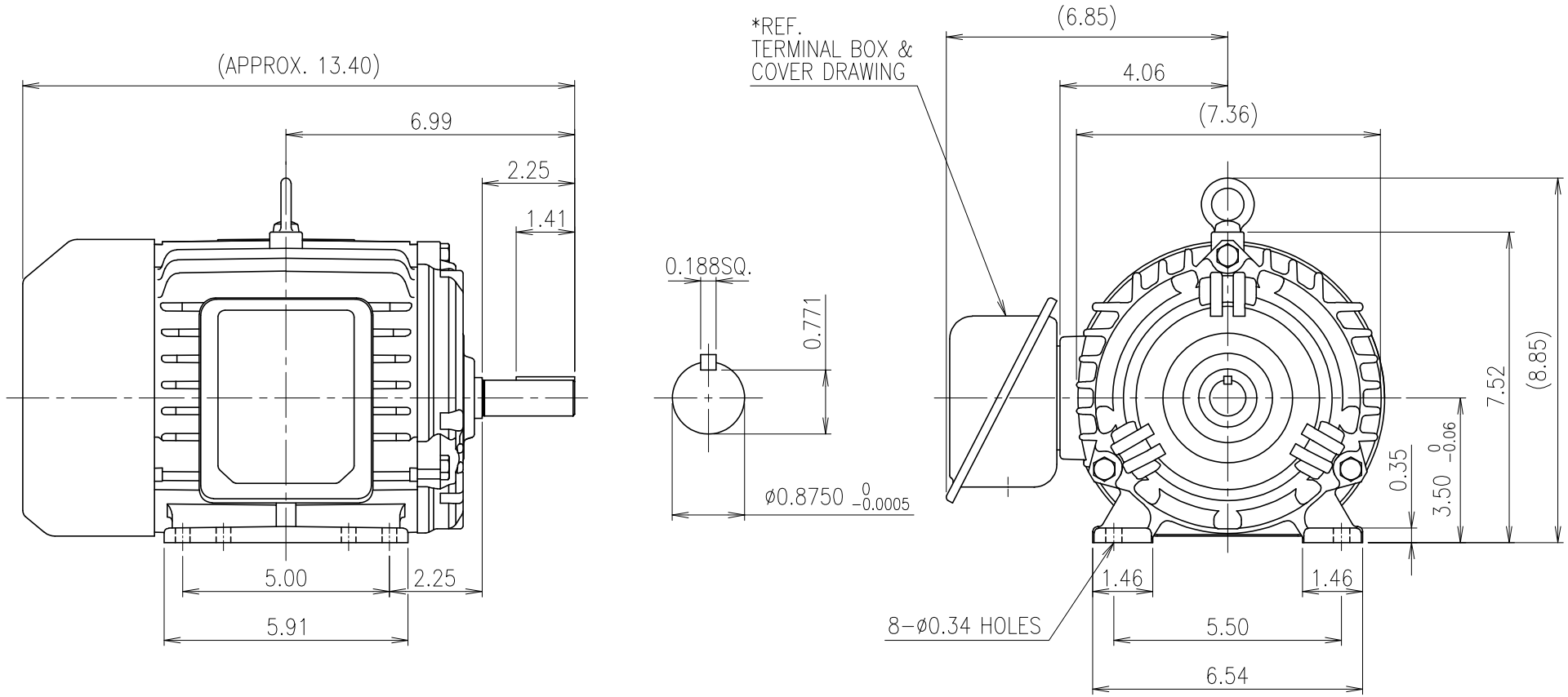

<NOTE>

1) THE TOLERANCES ARE IN ACCORDANCE WITH NEMA MG -1.

No.	DATE	DESCRIPTION of REVISION

A4(297X210mm) FORM CE-14-0100-4A4 2013.11.20

HYOSUNG HEAVY INDUSTRIES

TYPE A.C MOTOR 145T

DWG NAME **LOW VOLTAGE MOTOR**
LV OUTLINE DIMENSIONS

DWG No. **ES1AS156202**

UNIT	inch
SCALE	1:4
DATE	2024-11-25
REVISION No.	0.1
THIRD ANGLE PROJECTION	

REF. No. –

C

The information written in this drawing is HYOSUNG HEAVY INDUSTRIES's property, and may not be disclosed and/or reproduced without the prior official permission of HYOSUNG HEAVY INDUSTRIES Corp.